Change to G509H02DT11G, U2701 is EOL.

EN Input Threshold-High Minimunm=1.2V

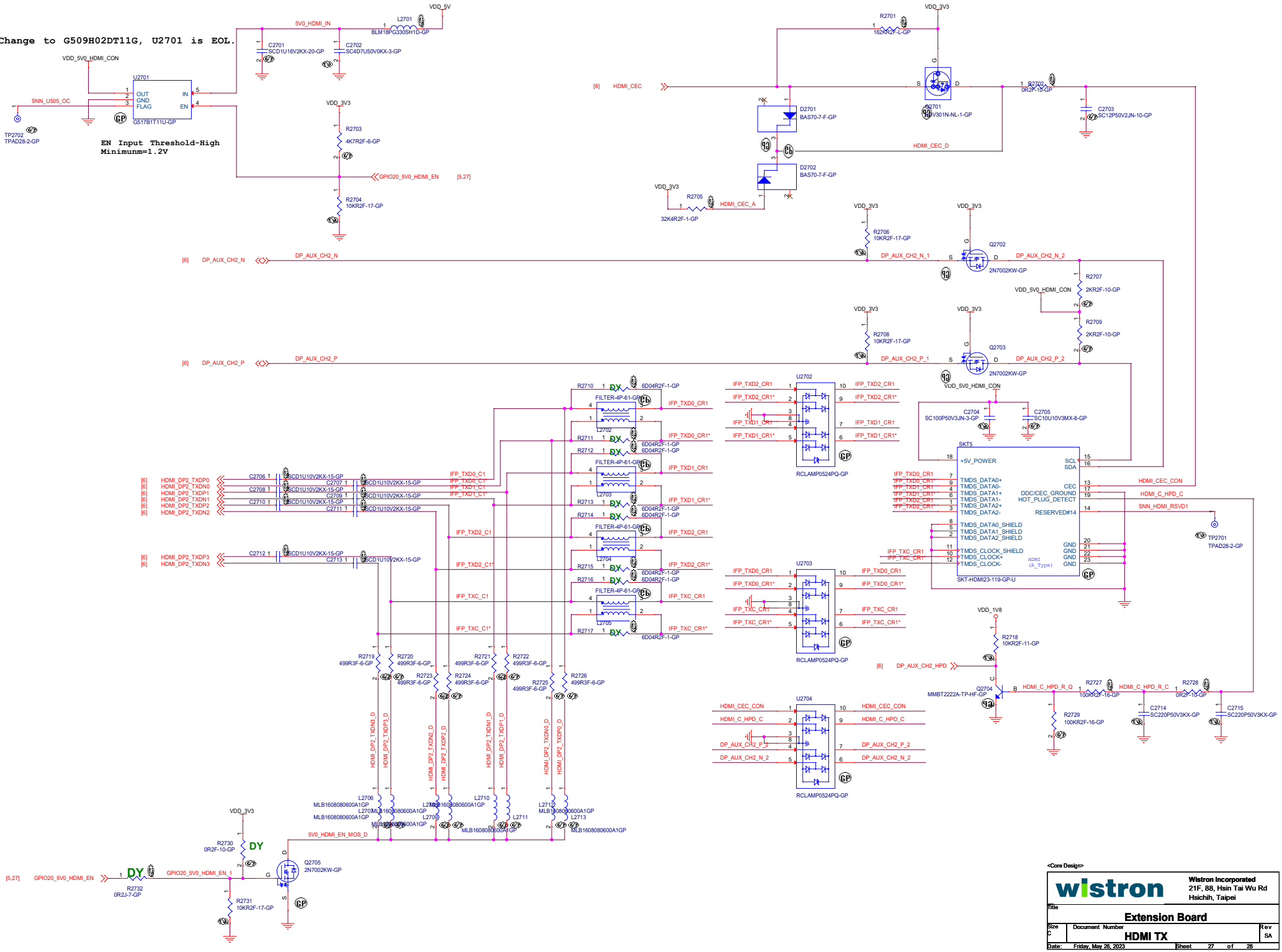

<Core Design>

wistron

Wistron Incorporated
21F, 88, Hsin Tai Wu Rd
Hsichih, Taipei

Title: Extension Board

Size: C | Document Number: HDMI TX | Rev: SA

Date: Friday, May 26, 2023 | Sheet 27 of 28